Notice

Suspension Units Attached to Hall Ceilings

MOC Event Center Messe München

Suspension units may only be attached to the roof-supporting framework and altered by the accredited Messe München GmbH service firms (e.g. opening a bridle). Orders for suspensions must be made in writing to the Department Events at the MOC Event Center Messe München using form 4.1.
The construction to be suspended may be situated only within the limits of the stand. Any intended suspension point on the roof construction of the halls can be loaded to a maximum of 25 kg **perpendicularly**. For each suspension point, the load must be individually specified and supporting documentation provided on request. Suspension units for heavier loads only on request (the planning costs will be charged to the exhibitor). At the end of each fastening point (transfer point) is a cable holder with a Reutlinger type ring eye.

For reasons of safety, the following types of suspension are not permissible:
- Suspension of stand components
- Securing of stand components or exhibits (stand components or exhibits must stand securely on their own)
- Suspended constructions connected rigidly or by force of gravity with the hall floor.

The use of lifting devices (e.g. chain hoists, motor hoists) absolutely must be discussed and agreed with the respective contracting firm of Messe München GmbH.

With regard to the attachment of objects to be suspended, the relevant safety provisions are to be observed. These also and especially include the provisions of the German Statutory Accident Insurance = DGUV Regulation 1 (Principles of Prevention), DGUV Regulation 17 (formerly BGV C1), DGUV Regulation 54 (formerly BGV D8), the DGUV-I 215-313 (formerly BGI 810-3) and, if applicable, the VStättV directive governing places of assembly (see also provisions set out under IGVW SQ P1 relevant to truss systems).

The following details and enumerations serve as an overview and do not claim to be complete.

Spotlights, loudspeakers, effects devices etc. are always to be provided with a second independent safety facility (safety cable)! Compliance with the provisions set out under DGUV Information 215-313 is required with regards to the dimensioning of the safety cables. The safety attachment is to be executed in such a way that the falling distance does not exceed 20 cm.

Lighting truss systems must be fitted by the system installer with additional protective potential equalization (copper, min. 10 mm²) as per VDE 0100 part 711. The equipotential bonding lead between the transfer point and the lighting truss system may be carried out by the exhibitor's own electricians or be ordered for execution by the accredited electrical contractor.

Permissible means of attachment

Nominal load at 0.5 times the carrying capacity value indicated by the manufacturer and not exceeding one tenth of the minimum breaking force. Cables and straps may be loaded to a maximum of one twelfth of the minimum breaking force.

Ensure that edges are protected! The edge radius must be at least as large as the diameter of the means of attachment (cable, span set etc.). Means of attachment made of synthetic fibers are not suitable for use close to spotlights.
- Wire cable in accordance with DIN EN 12385, generally round strand cable, standard 6 x 19 FC in accordance with EN 12385-4, with approval
- **Short**-linked chains with approved appurtenances, quality class 8 in accordance with DIN 685, with approval
- Textile span sets in accordance with DIN EN 1492, with approval and indication of carrying capacity with the use of an additional safety facility (safety cable) made of wire cable or chain
- Aluminum or steel clamps which are approved for the respective trusses (accessories).
- Wire rope round sling with synthetic fiber hose sleeve ("Steelflex") and indication of load-bearing capacity.

Permissible carrying devices:
- Chain motors in accordance with DGUV Regulation 17 (formerly BGV C1)
- Chain motors in accordance with DGUV Regulation 54 (formerly BGV D8) with wire cable or chain "hung dead" (parallel load-carrying to bypass the motor)
- D8 Plus chain motors in accordance with IGVW SQ P2.

Nominal load: see manufacturer's specifications.

Permissible means of fastening

Nominal load at 0.5 times the carrying capacity value indicated by the manufacturer and not exceeding one tenth of the minimum breaking force.

- Shackles, straight and curved, quality class 6, according to DIN EN 13889, with indication of carrying capacity; for dynamic loads (e.g. suspension of loudspeakers), only with safety split pin or retaining nut
- Quick-connection element with clamping nut (quick link) acc. to with DIN 56 926, with indication of carrying capacity
- Cobra fork head hooks – only in connection with chains acc. to with DIN 685
- Turnbuckles with closed eyes, e.g. acc. to with DIN 48334, with indication of carrying capacity; for dynamic loads (e.g. suspension of loudspeakers), only with safety split pin and retaining nut
- "O" rings, closed, with indication of carrying capacity.

Permissible cable end connections
- Rope sockets (symmetrical) acc. to EN 13411-7; for dynamic loads (e.g. suspension of loudspeakers), only with rope clamp (eccentric) acc. to DIN 1142
- Asymmetrical rope sockets (wedge end clamps) acc. to EN 13411-6; for dynamic loads (e.g. suspension of loudspeakers), only with rope clamp (eccentric) acc. to EN 13411-5
- Wire rope clamps acc. to DIN EN 13411-3, only with cable eye stiffener acc. to DIN EN 13411-1.
- Reutlinger

Impermissible means of attachment
- Wire cable without approval
- Covered wire cable
- Long-linked chains (inner length of the link > three times the nominal diameter of the chain material)
- Untested chains
- Cable binders
- Textile span sets without approval and indication of carrying capacity, or without the use of an additional safety facility made of wire cable or chain
- Damaged means of attachment (e.g. kinked cables, span sets with damaged covering, span sets without label / tag)
- Wire cable holders (with the exception of those carrying a BGV test certificate sticker and following consultation with the relevant Messe München GmbH contractor).

Impermissible carrying devices
- Chain motors in accordance with DGUV Regulation 54 (formerly BGV D8) without safety cable (i.e. not "hung dead" in a wire cable or chain).

Impermissible means of fastening
- Carbine swivels, unscrewed
- Carbine swivels, screwed
- Open hooks
- Turnbuckles in open form in accordance with DIN 1480
- Quick-connection element with clamping nut (quick link), without indication of carrying capacity
- Textile span sets as connections between two cross-beams
- Further means of fastening without indication of carrying capacity.

Impermissible cable end connections
- Rope clamps (eccentric) in accordance with EN 13411-5
- Rope clamps (eccentric) in accordance with DIN 741.

See also illustrations of safety details relevant to means of attachment on page 2.

Not permitted!

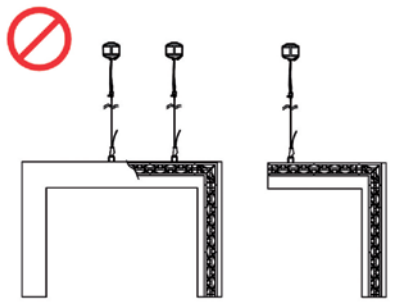

– Securing / Suspending of stand components or exhibits
– Suspended structures connected rigidly or by force of gravity with the hall floor

Permitted!

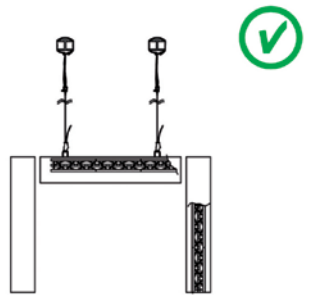

– Suspension units for lighting systems, cross-beams and banners

Not permitted!

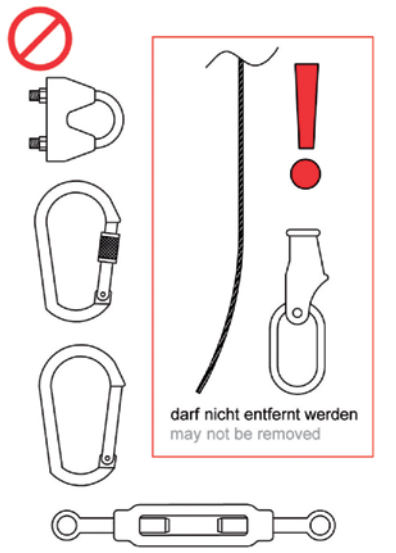

– Carbine swivels unscrewed / screwed
– Rope clamps (eccentric)
– Tension locks without safety cotter pin or counter nut

Permitted!

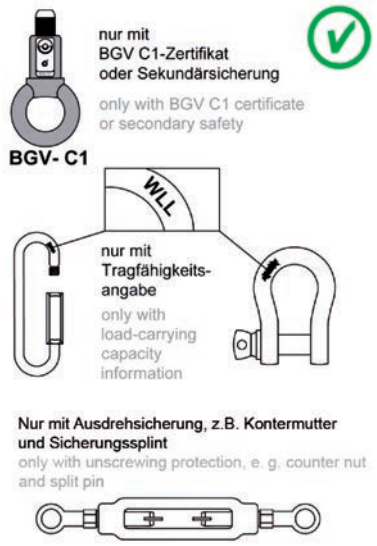

– e.g. shackles with indication of carrying capacity
– e.g. quick-connection element with clamping nut (quick link) with indication of carrying capacity

Not permitted!

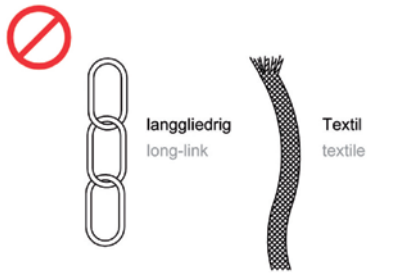

– Long-linked chains (inner length of the link > 3 times the nominal diameter of the chain material)
– Textile ropes / plastic coated steel cables

Permitted!

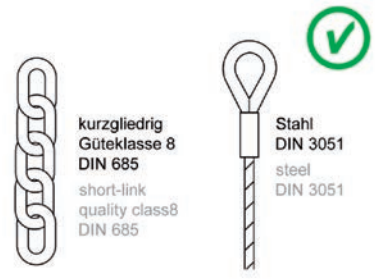

– Short-linked chains quality class 8 / DIN 685
– Round strand cable in accordance with EN 12385